加工精度	

Pull Rod Select		
		BT(M24X3.0)
		NT(M24X3.0)
		NT(1")

Accessories: T-Screw x4
M16XP2.0X67L

Max Cutter Dia	ø150(6")
Max Torque	1000N.m
Max Power	38kw
Max Revolving	800rpm
Main Spindle Steering	Right Turn

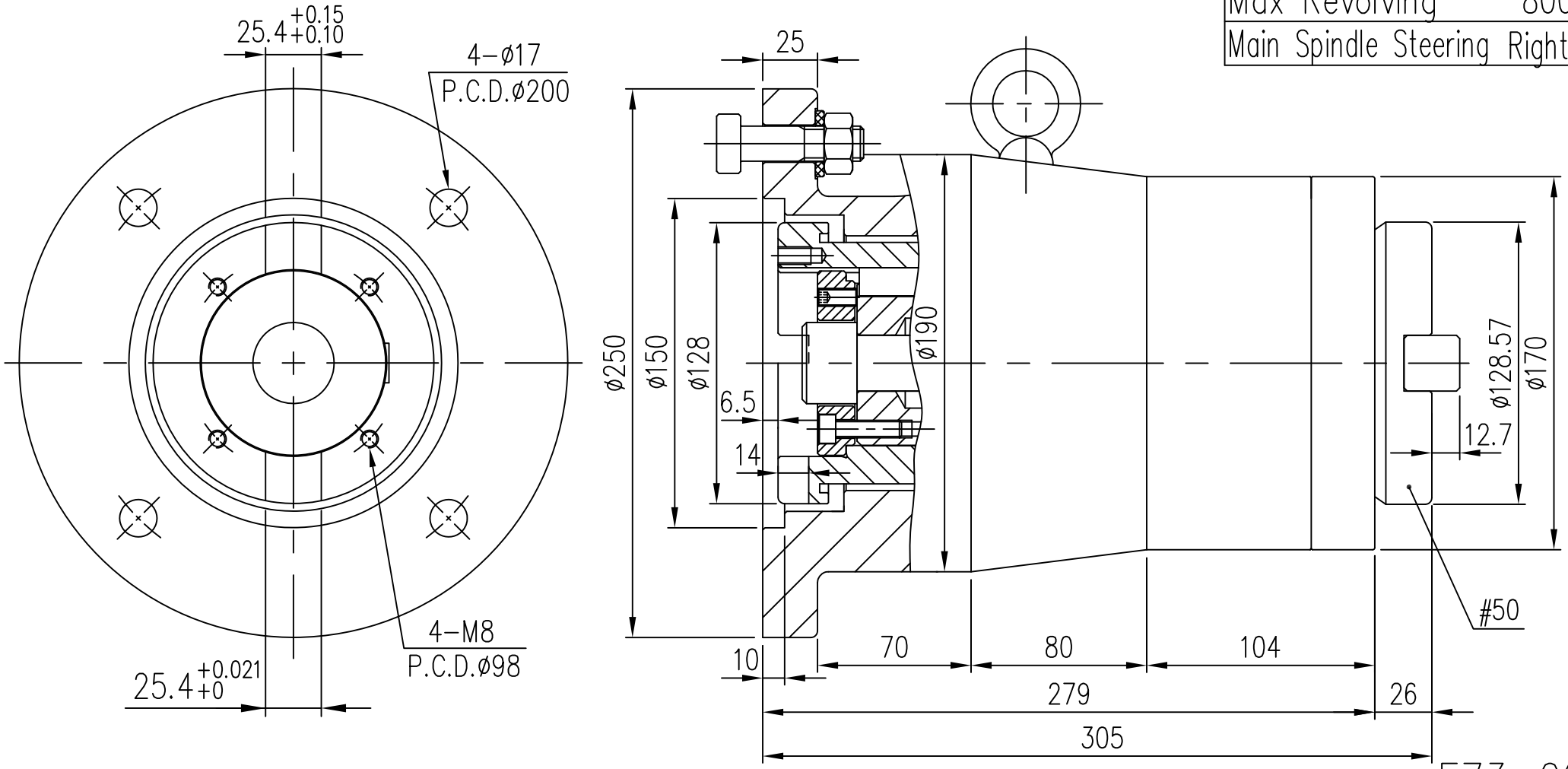

E73-06(E)