加工精度	
Max Cutter Dia	ø150(6")
Reduction Ratio	1 : 1
Max Torque	850N.m
Max Power	38kw
Max Revolving	2000rpm
Main Spindle Steering	Right Turn

Accessories: T-Screw
M16XP2.0X67L X4

Pull Rod Select		
		BT(M16XP2.0)
		NT(M16XP2.0)
		NT(5/8")

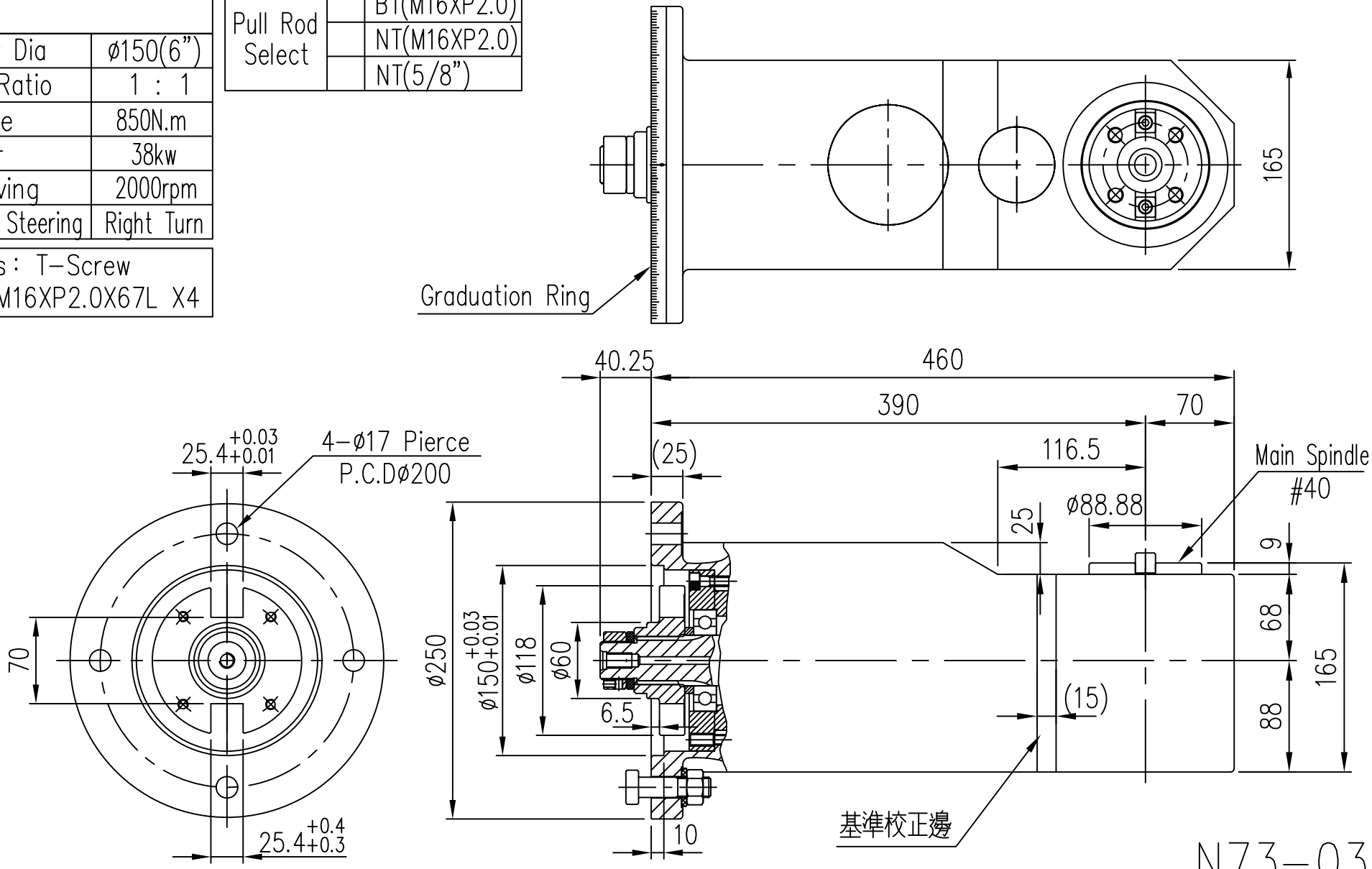

N73-03(E)