加工精度	
Max Cutter Dia	ø150(6")
Reduction Ratio	1 : 1
Max Torque	1000Nm
Max Power	38kw
Max Revolving	2000rpm
Main Spindle Steering	Right Turn
Accessories:"T"-Screw M18XP2.5X87L x6	

Pull Rod Select	
	BT(M24X3.0)
	NT(M24X3.0)
	NT(1")

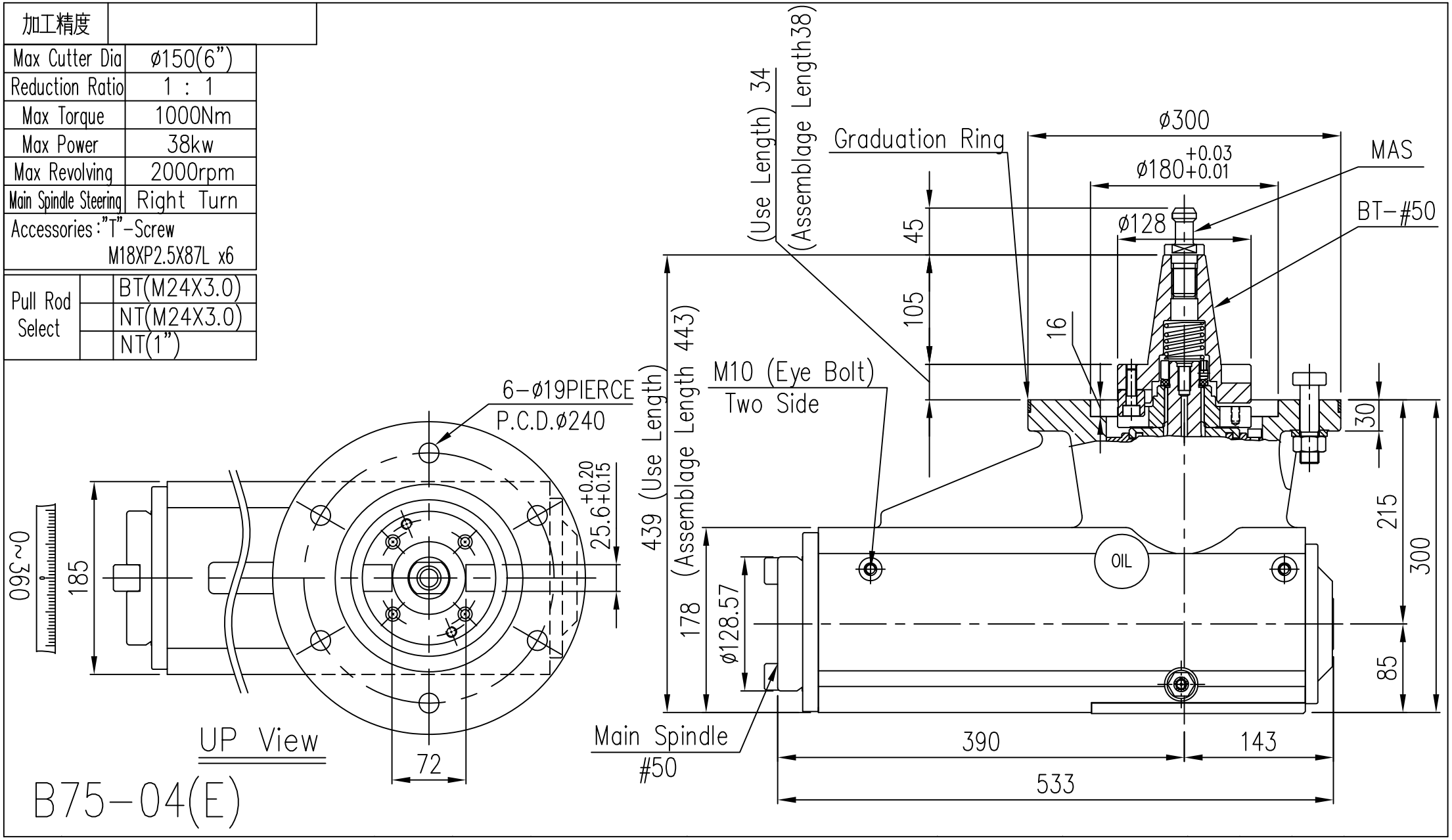

B75-04(E)