加工精度	

Pull Stud Select		
		BT(M24X3.0)
		NT(M24X3.0)
		NT(1")

Accessories："T"-screw X5
M18XP2.5X87L

Max Cutter Dia	ø200(8")
Reduction Ration	1 : 1
Max Power	42kw
Max Torque	1200 N.m
Max Revoling	1200 RPM
Main Spindle Steering	Right Turn

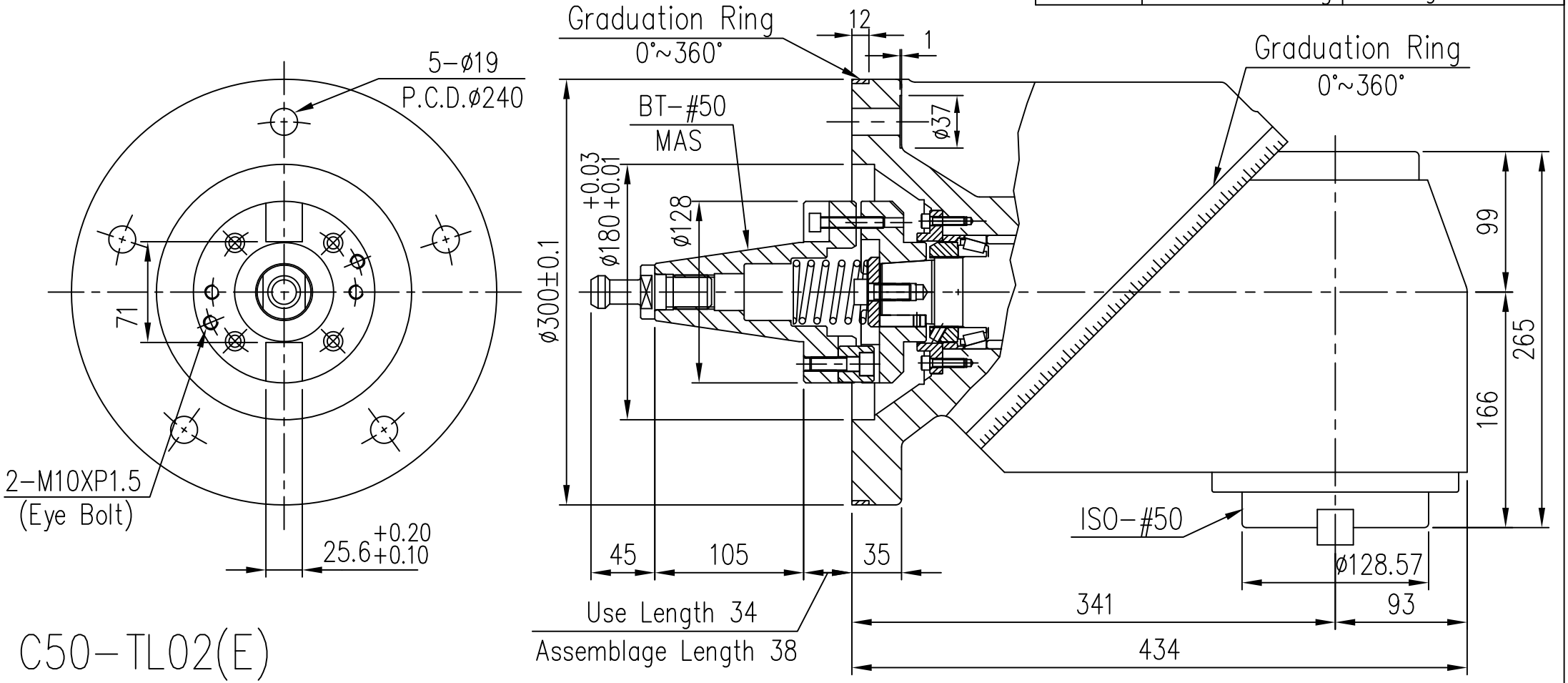

C50-TL02(E)