加工精度	

Accessories: "T"-screw
M16XP2.0X76L X3
M16XP2.0X67L X2

Pull Rod Select		
		BT(M24X3.0)
		NT(M24X3.0)
		NT(1")

Max Cutter Dia	ø200(8")
Reduction Ratio	1 : 1
Max Torque	1000 N-m
Max Power	38kw
Max Revolving	1200 RPM
Main Spindle Steering	Right Turn

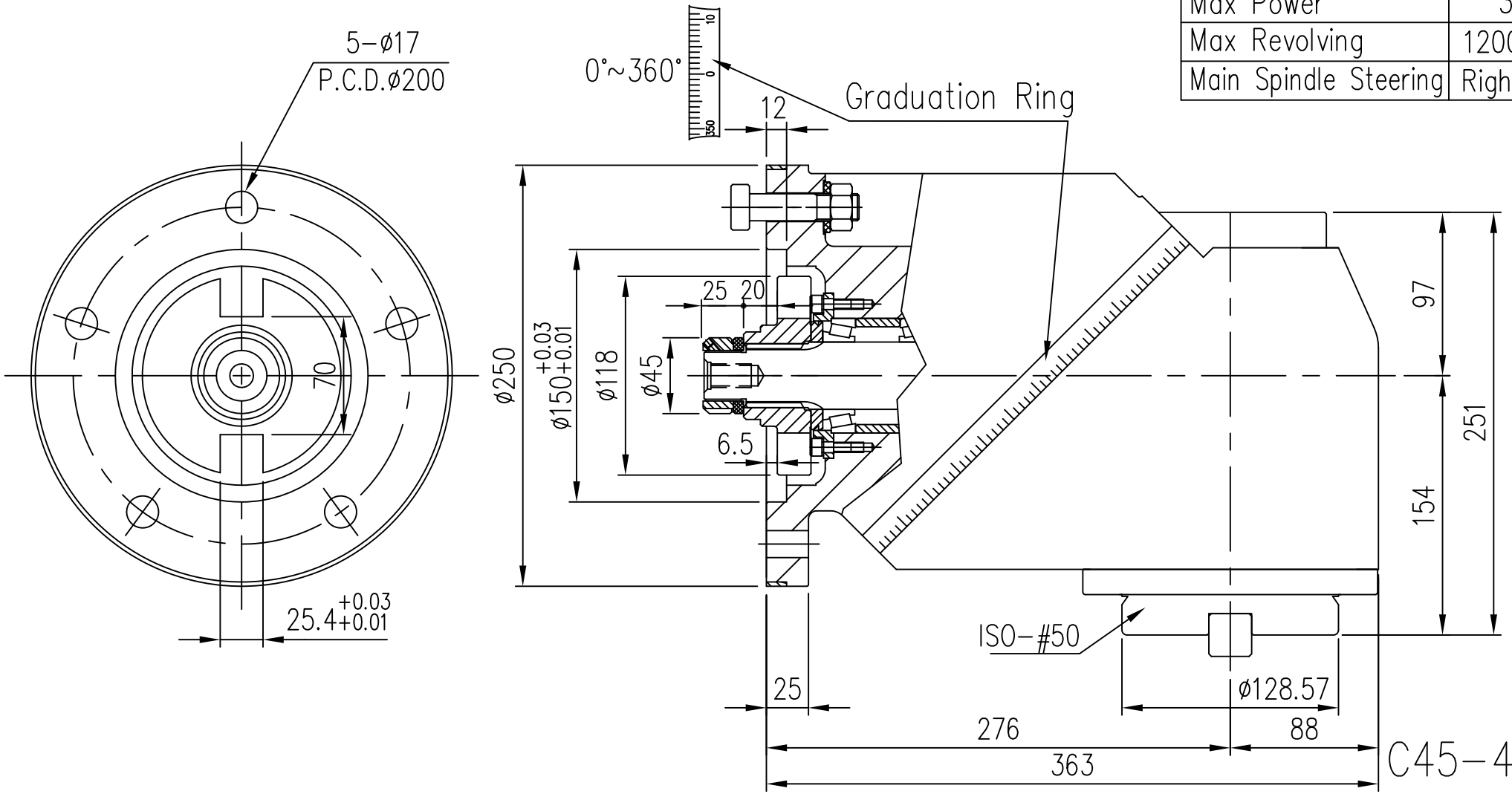

C45-4C(E)